CUT E

350 / 600

AGIE CHARMILLES

A member of UNITED MACHINING SOLUTIONS

TOUCH YOUR SUCCESS

OUR INNOVATION KEEPS YOU AHEAD

AGIE CHARMILLES' tradition for constant innovation and strict quality standard push back the boundaries.

POWER YOUR PERFORMANCE

Our Intelligent Power Generator (IPG) boasts a wide range of expert technologies helping you achieve the surface quality and precision your customers demand.

ACCELERATE YOUR PRODUCTIVITY

Time saved is money earned. Turbo Tech, the onbaord speed technology, offers an excellent speed-accuracy compromise and puts you on the fast track to provide excellent performance at an affordable price.

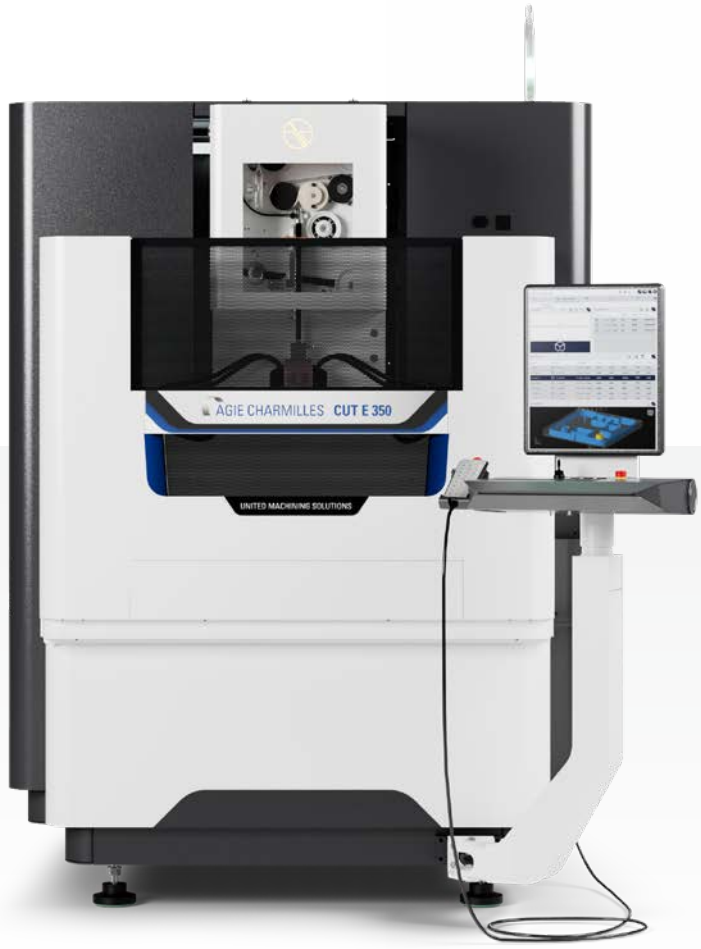

EXPERIENCE ERGONOMY

You're just one click away from machining perfect punches, dies, molds and parts, thanks to our intelligent and intuitive UNIQUA HMI, providing flexibility for all application types. Included are powerful tools for fast, safe machining preparation to make your machine programmer's life easier. Industry 4.0 at the tip of your finger.

BENEFIT FROM OUR EXPERTISE

Benefit from AGIE CHARMILLES' legacy of more than 60 years of EDM expertise. We make it a poinf of providing highly competent application support, customer services and business support for your specific field.

EXPERT SOLUTIONS FOR YOUR SUCCESS

Our legacy of more than 60 years of EDM expertise fuels our solutions and triggers your success.

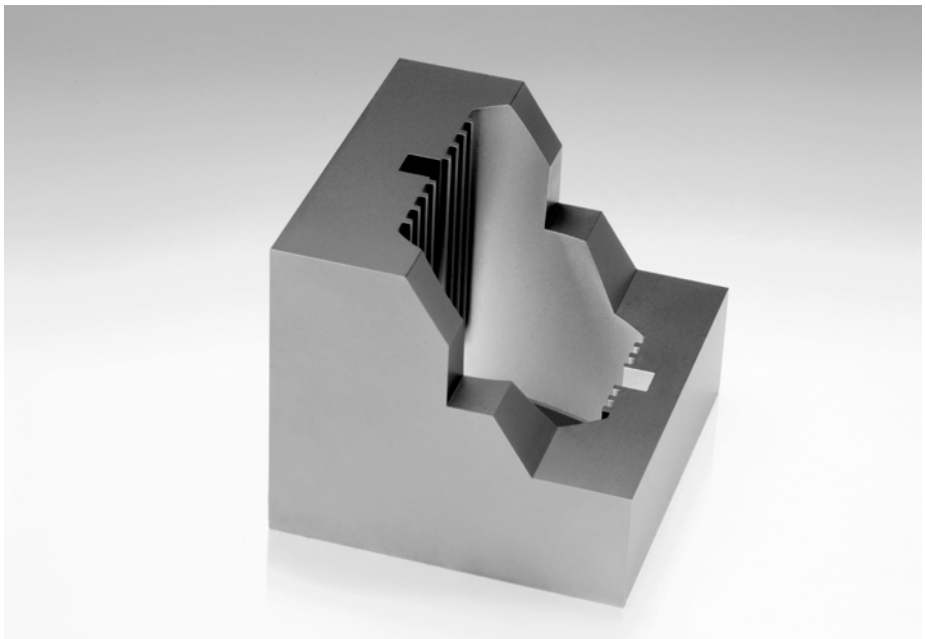

POWER-EXPERT: Wire breakage prevention on parts with variable heights
This smart module continually analyzes machining conditions and adapts the power to the geometrical modifications. Critical situations such as when the part is approaching or crossing a blind hole, are fully controlled by Power-Expert.

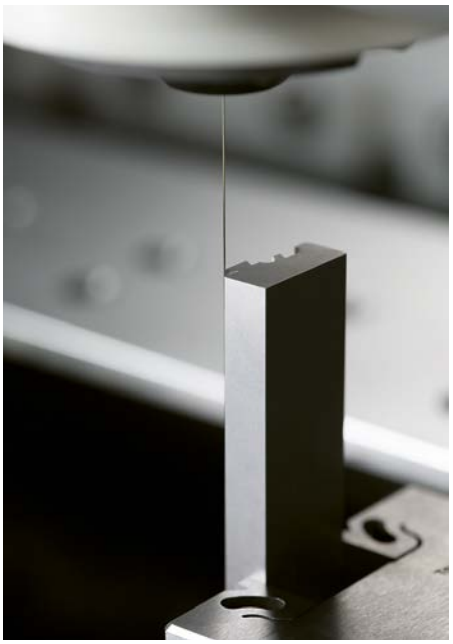

WIRE-EXPERT: Precision over height
Control of the part conicity compensates for the wire wearing across the height.

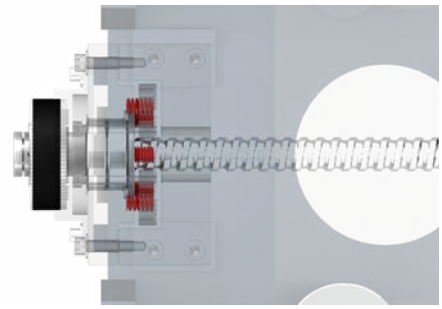

Integrated collision protection
Your operator can work with greater confidence during job preparation and execution, because the integrated collision protection on the X, Y and Z axes protects sensitive workpieces from damage.

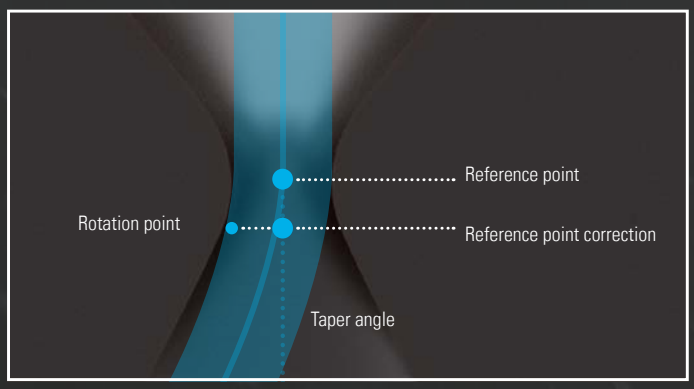

TAPER-EXPERT allows very precise machining of tapers with angles varying from 0 to 30°. It corrects in real time and during machining the position of the wire depending on the angle. Surface quality is the same as with cylindrical machining.

Benefits

- Unmatched taper accuracy
- Large range of applications
- Accurately-tapered surfaces increase injection mold tooling life

ENGINEERED FOR PRECISION AND REPEATABILITY

The CUT E series is designed to make it easy for you to accurately machine even large, heavy workpieces. You can count on highly repeatable results.

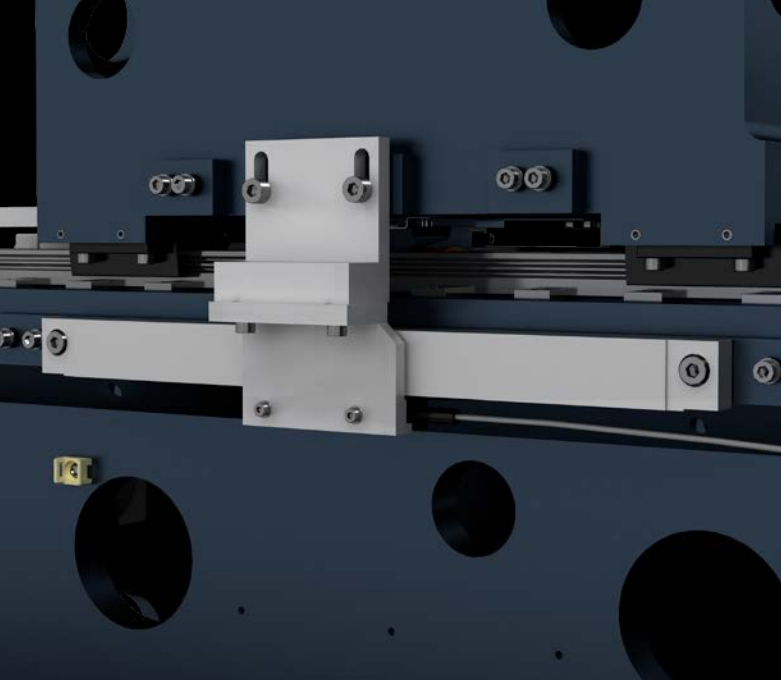

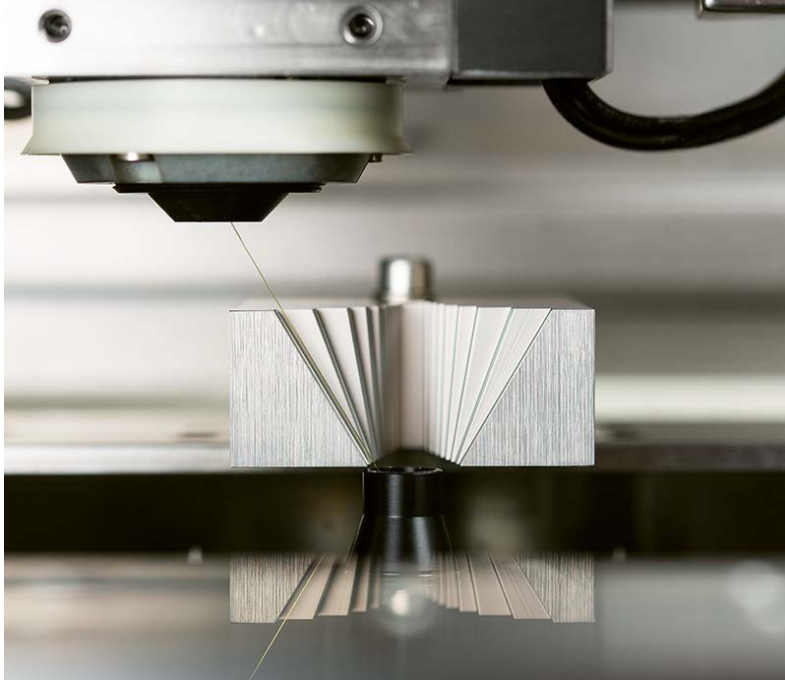

Glass scales
The glass scales preserve long-term accuracy, require no recalibration, and eliminate classical screw system errors related to backlash and wear.

Taper
Precison cuts up to 30° over 50 mm are enabled by a compact and flexible mechanical concept.

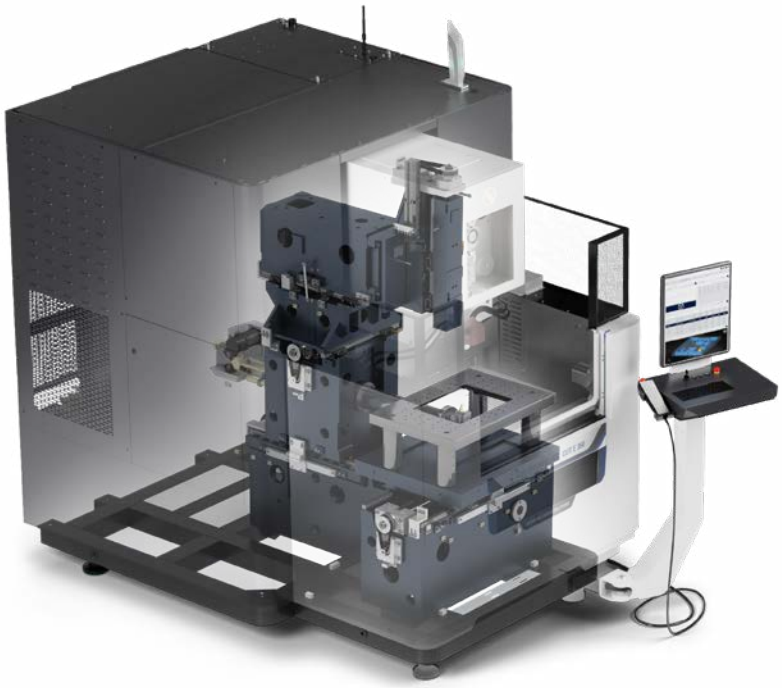

Compact structure
The T-shaped based frame permits loading of large and heavy work pieces. The compactness and independence of the XY/UV axes guarantee high positioning accuracy and highly repeatable results.

Large/heavy workpieces
Thanks to the standard drop door, large and heavy workpieces up to 1,000 kg can be easily loaded and unloaded.

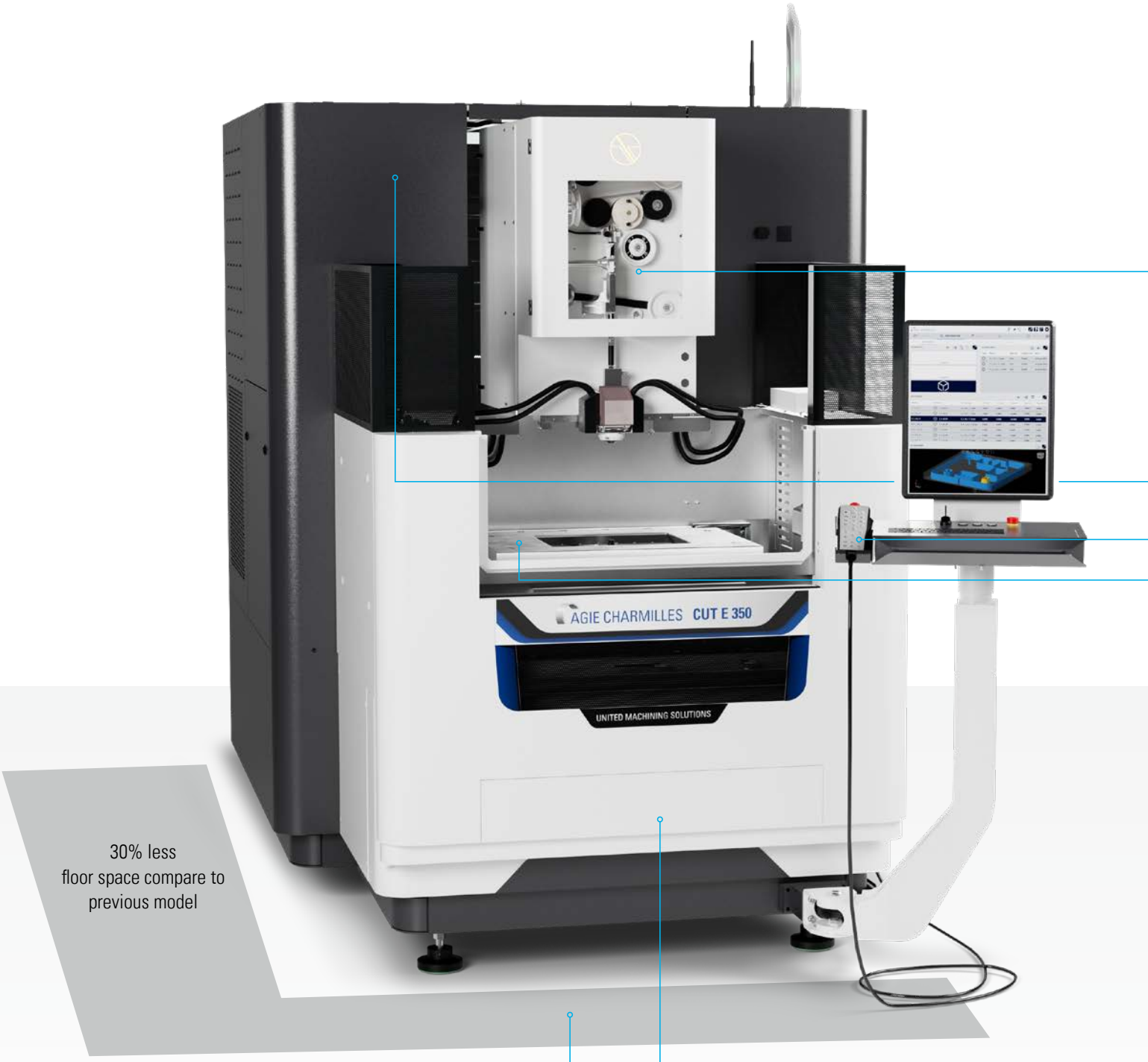

30% less
floor space compare to
previous model

Filters
Two filters are positioned side by side to make maintenance fast and easy.

Compact layout
The compact layout of about four square meters allows efficient integration of the CUT E series into your workshop.

Drop door
The standard drop door system allows easy and convenient access to the working zone.

NEW DESIGN, NEW FEATURES BASED ON YEARS OF LEGACY

Solutions to advance your performance and productivity, secure your processes, and accelerate your time to market are engineered into the CUT E 350/CUT E 600 Wire-cutting EDM machines.

Thermocut for easy operation
Your key to successful, efficient threading is preparing the wire properly before threading, thanks to the Thermocut module.

Wire circuit
Reliable table wire circuit design ensures a perfect unrolling process that does not disrupt the EDM process during machining.

Automatic threading
The automatic threading and rethreading is quick and useful for all kinds of coated and uncoated, hard and soft brass wires.

Automatic indexing chuck
Autoindexer is an integrated rotary indexing unit with continuous 90° capability intended for submerged use.

Remote control
Designed for one-handed use, the remote control is a standard feature offering ease of use and help in fine-tuning workpiece preparation.

Large spool
A 25 kg spool option is available for both the CUT E 350 and the CUT E 600 to extend running hours and allow continuous production in combination with
- 20-liter deionizing bottle
- Two filter cartridges

Save energy: an economic and ecological necessity
In order to control production costs, saving energy has become a priority in many workshops. The Econowatt modules manage the machine's electrical power so as to never waste energy when the machine is running unattended. When machining is finished or interrupted, the power supply is reduced to the minimum, lower than 1 kW, or completely disconnected depending on the parameters of the machine. Automatic restart is programmed according to a daily schedule corresponding to the working hours of the workshop. The machine is switched on in sufficient time to be thermostabilized when the workshop opens.

UNIQUA: THE HUMAN INTERFACE

UNIQUA is the new AGIE CHARMILLES human/machine interface (HMI) for wire EDM machines. It represents the pinnacle of more than a century of EDM technology – and the perfect combination of optimal functionality and usability (ergonomics) from our previous HMIs.

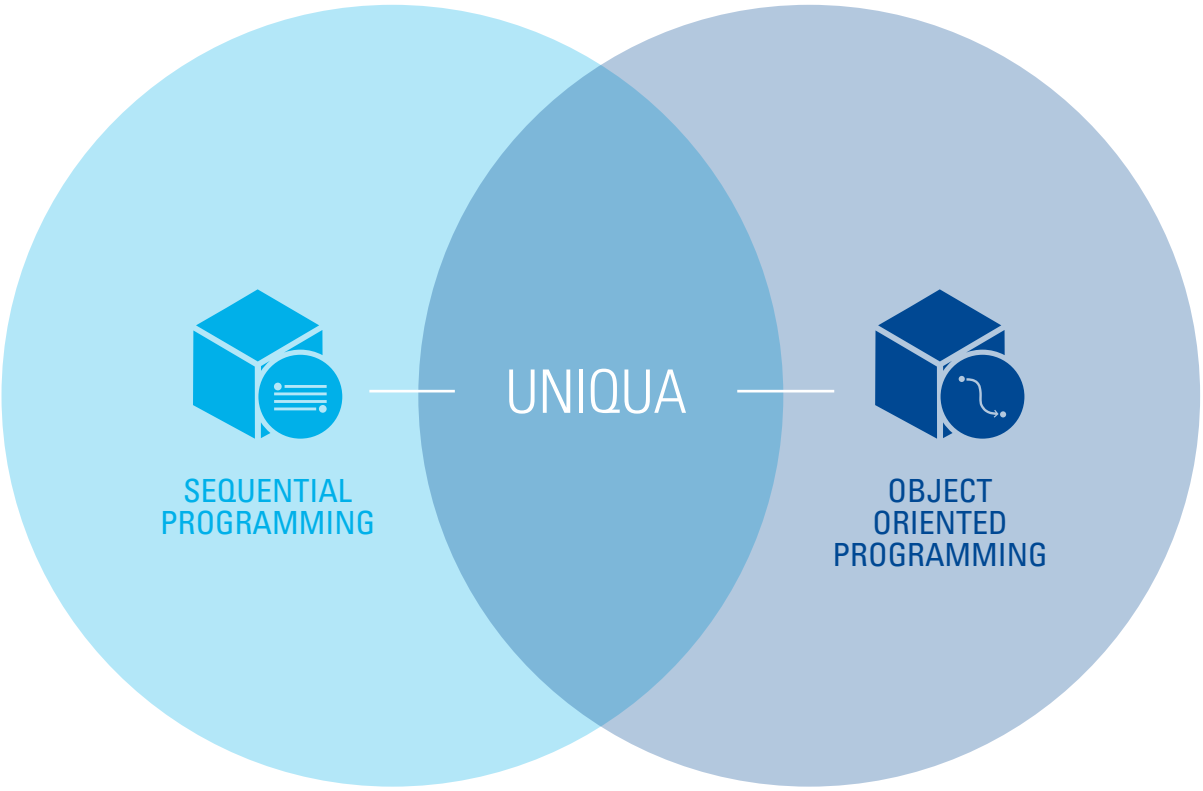

Every skill level
UNIQUA is ideal for wire EDM experts and beginners alike. While experts use its powerful functionalities, beginners can take advantage of its ease-of-use and short learning curve.

Every approach
UNIQUA works the way you want to work. Control the details of sequential programming with an updated ISO-based functionality or leverage the flexibility of object-oriented programming.

Every user
Work offline or at the machine. UNIQUA ensures compatibility with major CAD/CAM programs and also provides a powerful graphic tool with integrated CAM.

AGIE CHARMILLES
PREPARATION
MACHININGS
GEOMETRIES
2_J_ALL01
2_J_ALL02
TECHNOLOGIES
Type Name Material Height [mm] Wire
2_J_ALL_1_Target Steel 20.0000 AC Brass 900 0.2
2_J_ALL_12_Target Steel 20.0000 AC Brass 900 0.2
P_2_J_ALL_1_Target Steel 20.0000 AC Brass 900 0.2
MACHININGS
Name Geometry Technology X [mm] Y [mm] Z [mm] Rot C [°] Cle [mm]
2_J_ALL_1 2_J_ALL01 2_J_ALL_1_Target 0.0000 0.0000 0.0000 0.0000 0.0000
2_J_ALL_2 2_J_ALL02 2_J_ALL_1_Target 0.0000 0.0000 -20.0000 0.0000 0.0000
2_J_ALL_3 2_J_ALL03 2_J_ALL_1_Target 0.0000 0.0000 -20.0000 0.0000 0.0000
P_2_J_ALL_1 2_J_ALL05 P_2_J_ALL_1_Target 0.0000 0.0000 0.0000 0.0000 0.0000
P_2_J_ALL_2 2_J_ALL07 P_2_J_ALL_1_Target 0.0000 0.0000 0.0000 0.0000 0.0000
2_J_ALL_8 2_J_ALL08 2_J_ALL_1_Target 0.0000 0.0000 -5.0000 0.0000 0.0000
3D PREVIEWER

WHERE FLEXIBILITY MEETS PRODUCTIVITY

Flexible data input

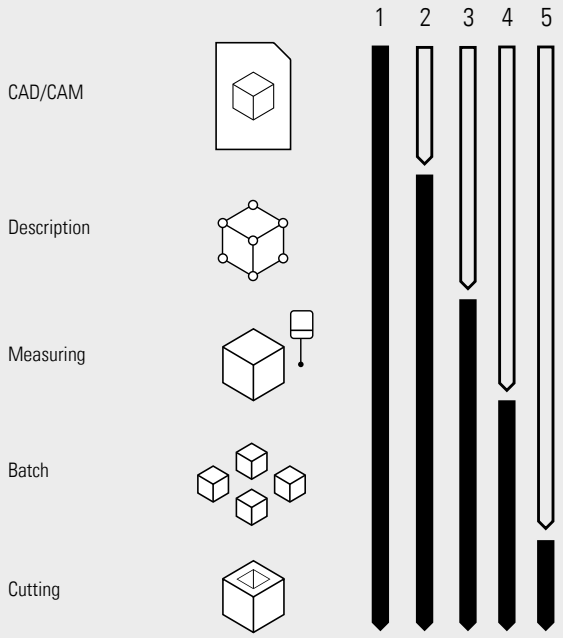

1. All data is entered directly at UNIQUA.
2. Only workpiece geometry is imported, remaining data is completed at UNIQUA.
3. Workpiece geometry, workpiece description and machining targets are imported, positioning and measuring data completed at UNIQUA.
4. A complete batch including workpiece, machining, positioning and measuring data are imported. Batch, in the case where a robot is connected, are managed directly via UNIQUA.
5. All data imported with direct execution at UNIQUA, including pallets placed in robot magazine.

Workflow preparation

MANAGER: Manage folders, files and jobs to streamline preparation and execution.

PREPARATION: Import or create geometries, and define machining conditions, technology and sequences. 3D renderings of every job can be previewed and sent directly to execution or back to Management.

EXECUTION: The execution cockpit allows operators to configure and monitor the job with access to variables and points. The current job's operation can also be monitored graphically throughout the entire execution process.

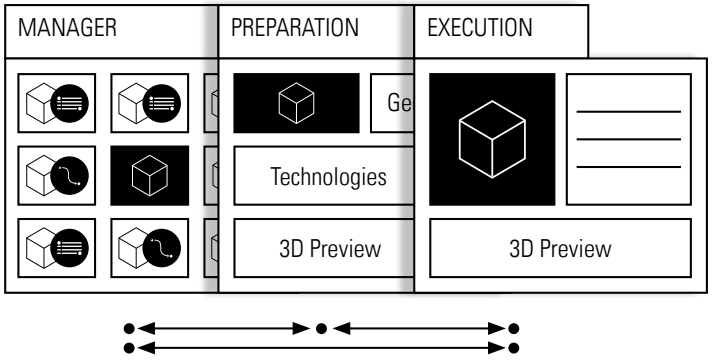

Change your working strategy at any time
UNIQUA's exclusive functionality offers you the flexibility to adjust cutting strategies anytime during preparation or execution.

Customized Strategy / Priorities
Customized machining sequences minimize unnecessary operator interventions and allow for planned downtime. Priorities can be changed during execution with "one click" directly at UNIQUA without interrupting machining.

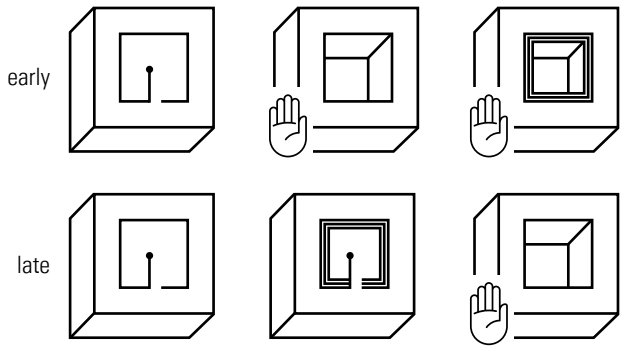

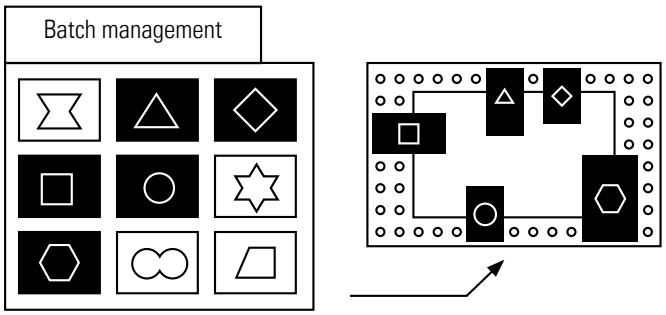

Optimized automation management
UNIQUA effectively manages workpieces by the piece, by the batch or on complete pallets. UNIQUA continuously monitors measuring and cutting processes to produce multiple pallets, which can be stored in the robot magazine. A full sequence of production in different pallets can be programmed directly from your CAD/CAM, avoiding the need of re-managing at the machine HMI.

Dynamic adaptation of batch execution
UNIQUA gives the operator full power to change workpiece and batch-execution priorities, including functions such as piece insert and priority change.

Piece insert
No loss of data or need of reprogramming when interrupting and inserting a job with Piece insert. The interrupted job is resumed exactly where it was stopped, without the need to modify existing data.

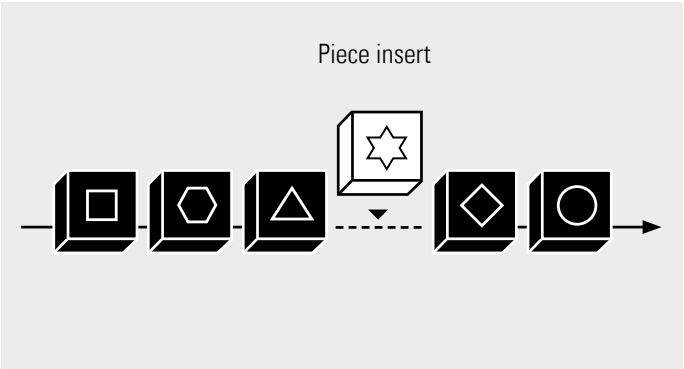

DIGITAL IPG: POWER YOUR PERFORMANCE

Your efficient production is at the heart of the modern IPG. Its onboard technologies boost cutting speed, precision and surface quality to satisfy your customers and put you ahead of your competitors.

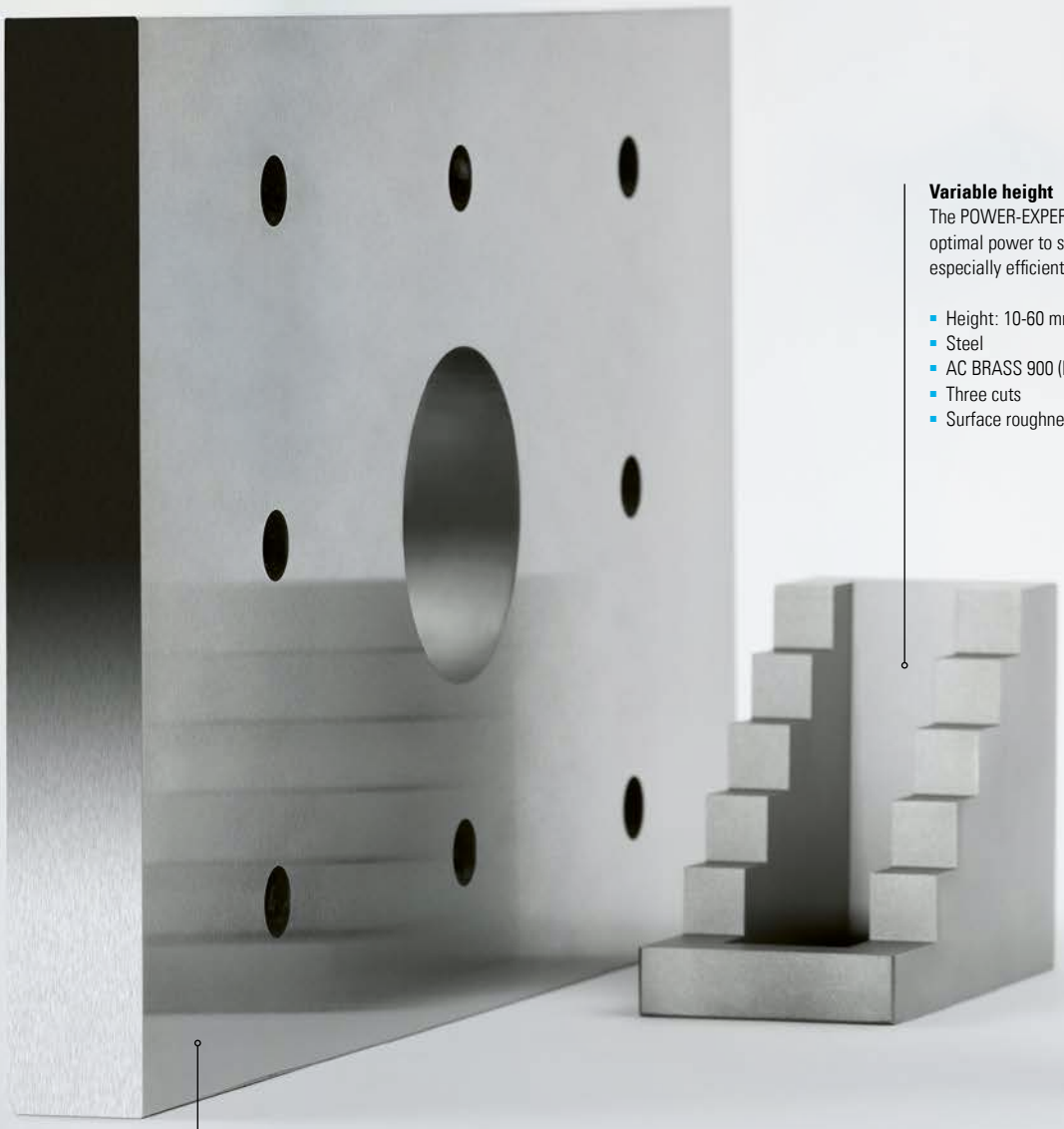

Variable height
The POWER-EXPERT module decides the optimal power to send in the wire, and is especially efficient for stepped parts.

- Height: 10-60 mm
- Steel
- AC BRASS 900 (hard) wire
- Three cuts
- Surface roughness: Ra 0.55 µm

Hole plate
- Dimensions: 250 x 150 x 15 mm
- Steel
- AC CUT AH (brass coated) wire
- Five cuts
- Positioning accuracy: ±3 µm
- Surface roughness: Ra 0.22 µm

Stamping punch
The corner strategy module automatically adjusts the parameters during changes of direction to ensure sharp angles and small radii.

- Height: 60 mm
- Steel
- AC CUT AH (brass coated) wire
- Five cuts
- Contour accuracy: ±5 µm

High part
- Height: 150 mm
- Steel
- AC CUT AH (brass coated) wire
- Six cuts
- Maximum dimensional error TKM: ±5 µm

Taper Expert
The CUT E series demonstrates its versatility by offering the capability to cut cones

- Up to 30 degrees over 56 mm height
- Steel
- AC BRASS 400 (soft) wire
- 5 cuts
- Surface roughness: Ra 0.55 µm

Hard metal die
- Height: 20 mm
- Tungsten carbide
- AC CUT AH (brass coated) wire
- Five cuts
- Surface roughness: Ra 0.17 µm

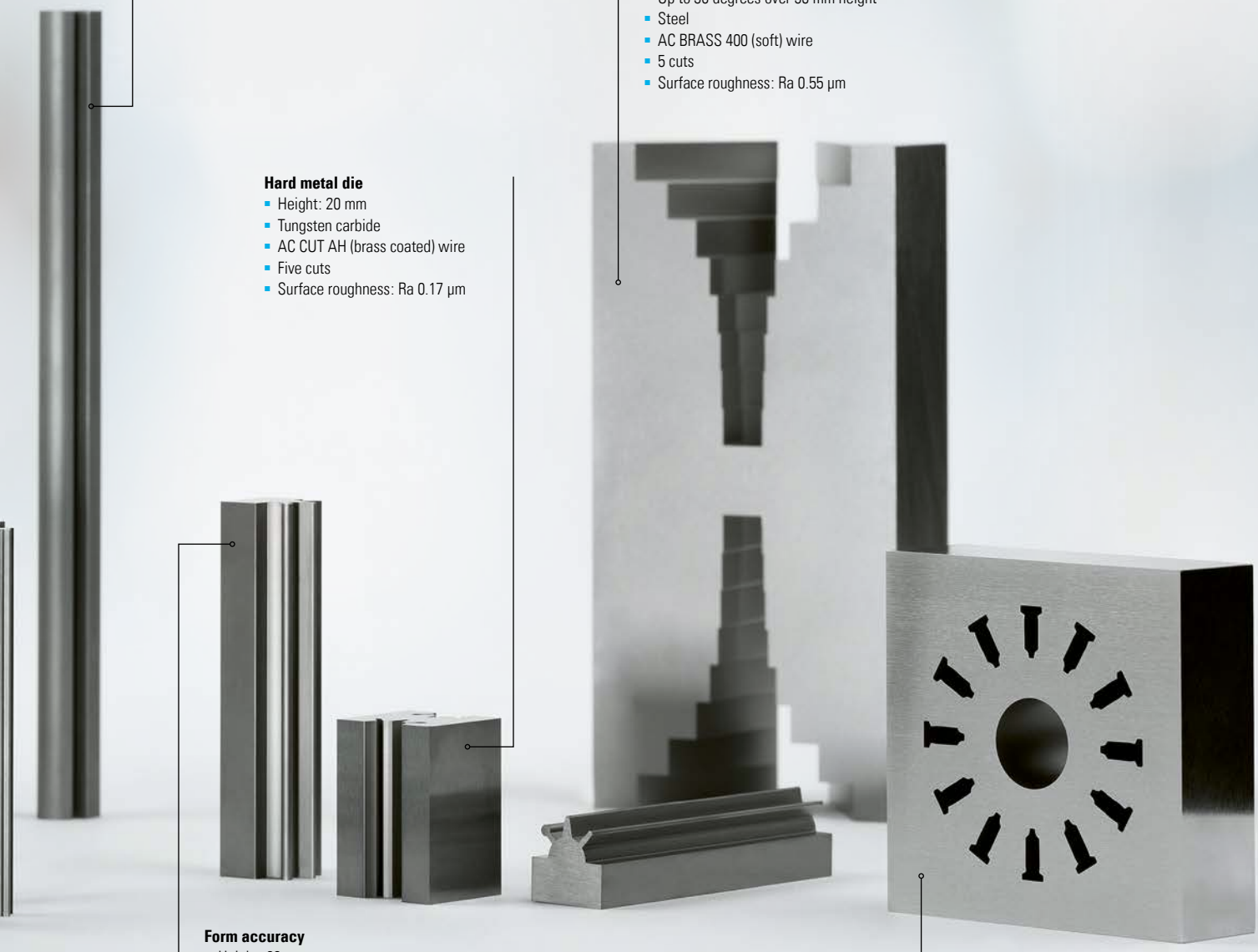

Form accuracy
- Height: 60 mm
- Steel
- AC CUT AH (brass coated) wire
- Five cuts
- Maximum dimensional error TKM: ±2 µm

Stamping die
- Height: 20 mm
- Steel
- AC CUT AH (brass coated)
- Five cuts
- Clearance: 4 µm
- Surface finish: Ra 0.22 µm

DIGITAL IPG: DEDICATED TO ACCELERATE YOUR PRODUCTIVITY

Our latest anti-electrolysis IPG combined with a new state-of-the-art CNC is the new base for the next generation of Wire-cutting EDM machines. The future is here.

Electronic integration
Our latest generation of power generators allows a digital control of each spark bringing precision and very fine surface quality down to an outstanding Ra 0.16 µm.

Easy EDM management

The EDM EXPERT module generates the best process according to precision and material needs. A large panel of preconfigured technological parameters enables an optimal choice of settings for your application. Our latest high-performance wires enable excellent execution.

Steel dedicated process range

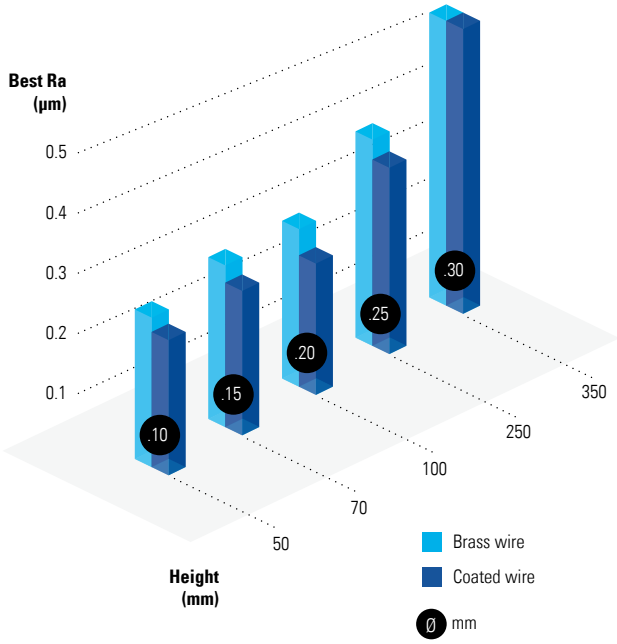

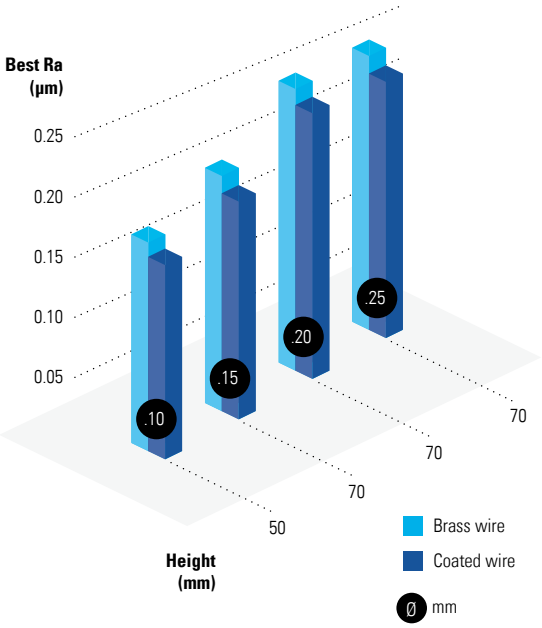

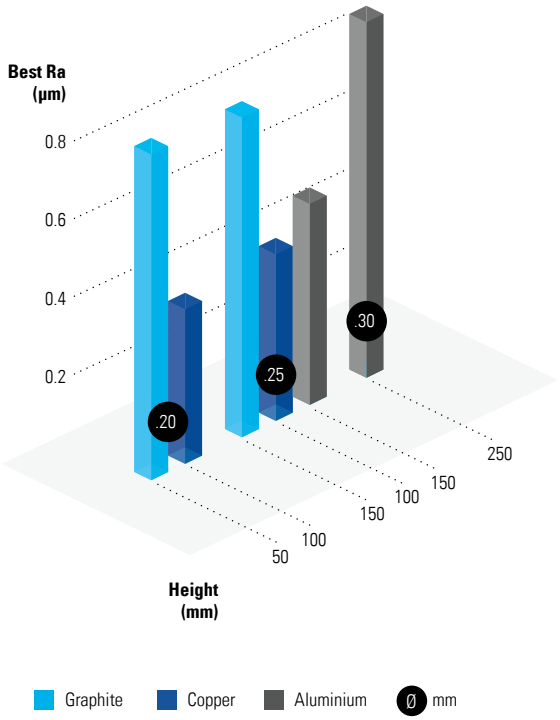

Speed dedicated process

Focusing on productivity, the integrated processes are saving you time and can reduce cutting time by as much as 18 % compared to equivalent standard machines.

AC CUT VS

A Wire-cutting EDM machine has a very wide range of applications and wire choice is crucial in order to obtain the best productivity and optimum results in terms of speed, precision and surface finish. The AGIE CHARMILLES AC CUT VS Certified wire accelerates cutting speed increasing machining speed up to 15 %.

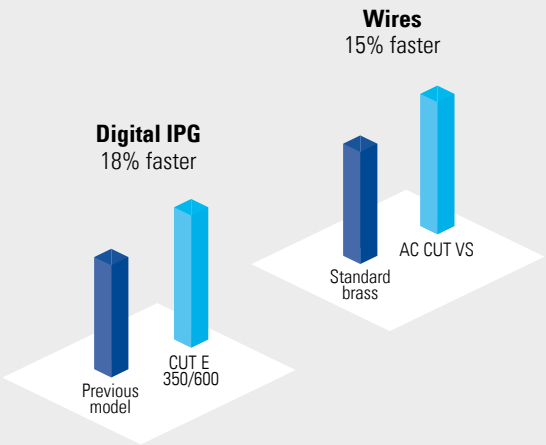

OUTSTANDING PRECISION AND REPEATABILITY

This part that you see here was machined under the conditions our customers face daily in the stamping industry. It demonstrates the excellent machining capabilities essential for precision parts: remarkable small corner precision and straightness accuracy, excellent contour precision, exemplary surface quality and outstanding production repeatability—four reasons to buy a CUT E series machine.

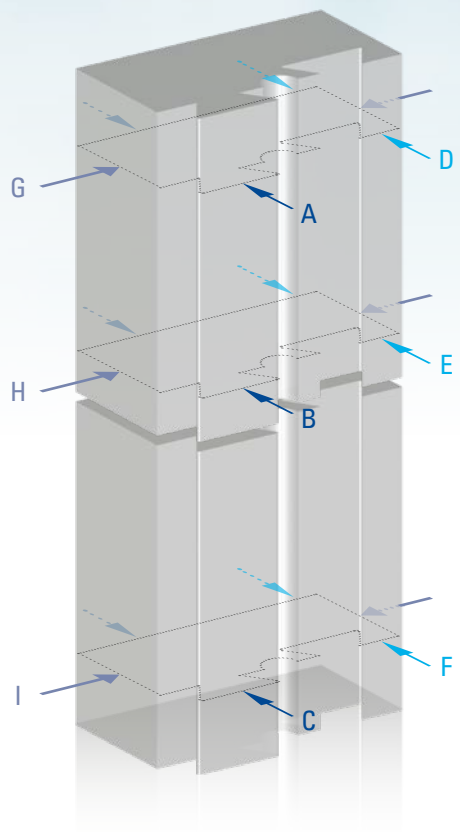

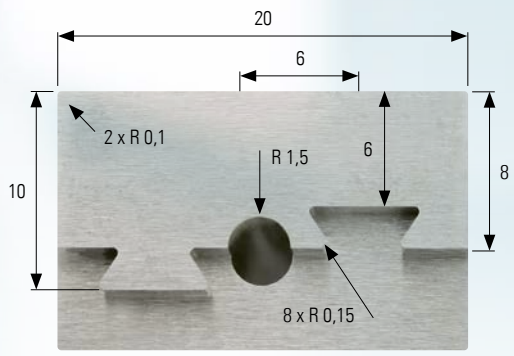

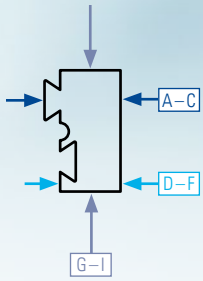

Technology parameters
Work piece material: K107/Sk11
Wire: AC Brass 900, Ø 0.2 mm
Height: 60 mm
Production time: 2 h 47' in 5 cuts
Part clearance: 3 µm
Gauge: 88 mm x Ø 3 mm, ± 3 µm

Technology parameters
Max dimensional error TKM: ± 3 µm
Geometrical accuracy / parallelism: 3 µm
Surface roughness: Ra 0.24 µm

Corner strategy

The corner strategies adjust automatically the machining parameters during changes of direction. Even on the smallest details, high geometrical accuracy is obtained. Achieve high accuracy with sharp angles and small radii.

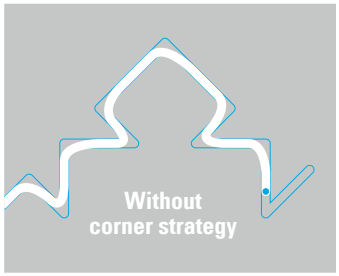

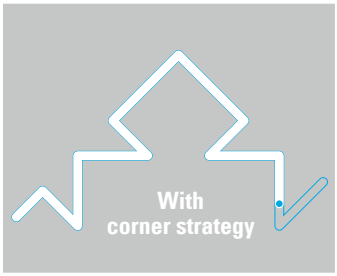

MACHINE OPTIONS: CUSTOMIZE YOUR SOLUTION

Make your CUT E 350/CUT E 600 solution distinctly yours by customizing it to your specific workshop needs. Find exactly what you need from our wide range of options.

1

4

7

2

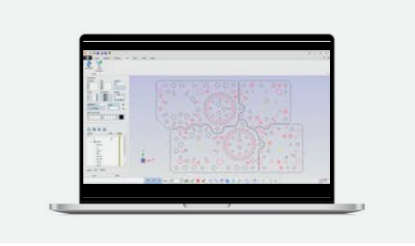
5

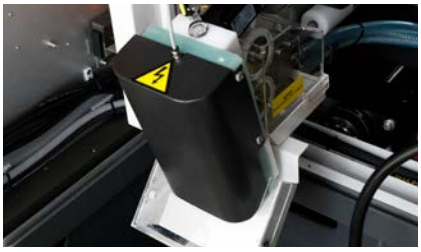
8

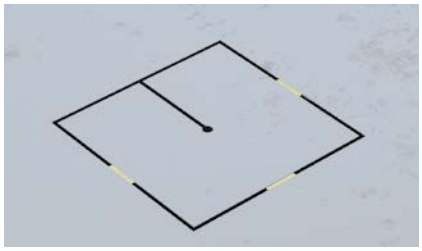
3

6

9

1. 0.1 mm diameter wire kit
This set includes all the parts that ensure a good machining reliability when using a wire diameter of 0.1 mm.

2. Taper expert 10°-30° kit
Option for accurate taper cutting
- One set of large radius guides
- One threading nozzle
- One set of nuts

Available for 0.2 and 0.25 mm diameter wires

3. Automatic Slug Welding
Automatically welds the core to the cavity, leaving a micro-fixture by using a reverse erosion process. This allows you to easily remove the core by a manual tap before the finishing cuts.

4. Alarm lamp
Stack lamp for the visualization of the equipment status
- Four-color configurable stack light
- Mounting material

5. AC CAM EASY
- Professional license:
  This option is the updated package from the basic version to the professional version.
- Advanced license:
  This option is the updated package from the basic version to the advanced version.

6. Automatic rotary axis chuck
Autoindexer is an integrated rotary indexing unit with continuous 90° capability intended for submerged use in Wire-cutting EDM machines.

7. 3D setup
Check planarity with a mechanical touch probe. Define wire inclination and the precise position of the part planes.

8. Wire chopper
Cuts wires into small parts and collects them in a box at the back of the machine.
Maximum box capacity 25 kg

9. 25 kg wire spool unit
For more running time and less manual intervention

SERVICE + SUCCESS

Our Service + Success experts deliver end-to-end support with proactive expertise, digital tools, and hands-on service to ensure your machines perform at their best throughout their life cycle.

Secure your sustainable machining success
A huge network of highly-trained experts delivering preventive maintenance and advanced support

Grow your people skills
Performance oriented training academy with a human-centric and hands-on approach of knowledge transfer

Realize the full potential of your equipment
Advanced diagnostics, certification, upgrades, training, and financial solutions

My rConnect

Digital services for all your UNITED MACHINING machines, anytime, anywhere
My rConnect is your gateway to advanced digital assistance. Enjoy simple navigation and direct access to UNITED MACHINING support, for all connected and unconnected machines, regardless of their age.

Free standard features
- Asset overview
- Service case management
- Conferencing and communication
- Machine documentation

On-demand features
- Remote access
- Live data

SUCCESS PACKS: TAILORED SERVICE SOLUTIONS FOR EVERY NEED

Success Packs are three annual subscription levels designed to support your machines throughout their life cycle. Whether you aim to reduce downtime, prevent issues, or avoid unexpected repair costs, there's a plan to match your needs.

BRONZE

For full responsiveness
Fast reply services to ensure machines are swiftly back up and running

SILVER

For peak performance
Periodic maintenance services to keep your machines in optimal condition

GOLD

For guaranteed peace of mind
Extended warranty coverage to mitigate financial risks and focus on your core business

CHOOSE YOUR PACK

	BRONZE	SILVER	GOLD
Speedy access Fast track for support	✓	✓	✓
Extended remote support 24/5 expert support through My rConnect	✓	✓	✓
Certified preventive maintenance Annual machine service performed under UNITED MACHINING standards		✓	✓
Core components diagnosis Annual checkup on the core machine components		✓	✓
Discounts Preferred prices for parts and labor		✓	✓
Extended warranty For up to five years			✓

TECHNICAL SPECIFICATIONS

MACHINE

		CUT E 350	CUT E 600
Dimensions of complete equipment *	mm in	1850 x 3050 x 2220 72.83 x 120.07 x 87.40	2160 x 3400 x 2320 85.04 x 133.86 x 91.34
Total weight of equipment without dielectric	kg (lbs)	2845 (6272)	4230 (9325)

WORK AREA

Part dimensions	mm in	820 x 680 x 250 32.28 x 26.77 x 9.84	1030 x 800 x 350 40.55 x 31.5 x 13.78
Max. part weight	kg (lbs)	400 (882)	1000 (2205)
Level of dielectric min./max.	mm (in)	0/280 (0/11.02)	0/380 (0/14.96)

AIR SUPPLY

Pressure	bar	6.5-8	6.5-8
Min. flow	l/min	150 (39.6 gal/min)	150 (39.6 gal/min)

AXES

X, Y, Z Travel	mm in	350 x 250 x 250 13.78 x 9.84 x 9.84	600 x 400 x 350 23.62 x 15.75 x 13.78
U, V Travel	mm (in)	±45 (±1.77)	±50 (±1.97)
Taper angle/height	°/mm (°/in)	±30/50 (±30/1.97)	±30/50 (±30/1.97)
X, Y, U, V, Z movement resolution	µm (µ-inch)	0.1 (3.94)	0.1 (3.94)
Speed of axis movement (XYZ)	m/min (in/min)	0-3 (0-118)	0-3 (0-118)
Anti-collision protection for axes		X, Y, Z	X, Y, Z

DIELECTRIC

Type		Deionised water	Deionised water
Total volume of dielectric	l	760 (200.77 gal)	1130 (298.51 gal)
Filtering cartridges		2	2
Deionization bottle		1	1
Deionization resin	l	20 (5.3 gal)	20 (5.3 gal)

* Width x depth x height

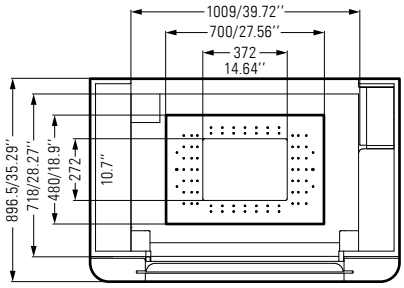

CUT E 350 table

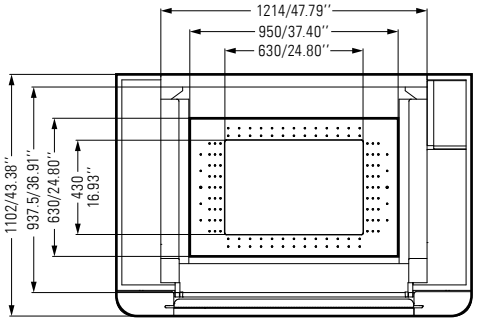

CUT E 600 table

WIRE

Standard wire guide	mm (in)	Ø 0.20 or Ø 0.25 (Ø 0.008 or Ø 0.010)
Wire diameter (according to configuration equipment)	mm (in)	Ø 0.10-0.30 (Ø 0.004-0.012)
Automatic threading for wires	mm (in)	Ø 0.10-0.30 (Ø 0.004-0.012)
Automatic rethreading for wires	mm (in)	Ø 0.10-0.30 (Ø 0.004-0.012)
Permissible weights and types of reel	kg (lbs)	8 (JIS P5), 25 (DIN 160) 17.63 (JIS P5), 55.11 (DIN 160)
Best Ra	µm (µ-inch)	0.14 (6)
Max. machine cutting speed	mm²/min (in²/min)	300 (0.46)

CABINET

Three-phase input voltage (V)	3 x 400
Network frequency (Hz)	50 or 60
Permissible fluctuations	±10%
Total installed power (kVA)	10
Permissible micro-break (ms)	3
Power factor	0.8
Screen/Operating system	19'' / Windows
Keyboard	Yes
Ethernet port USB	Yes
Remote control	Yes

AMBIENT CONDITIONS

Temperature for optimum accuracy	20 ±1°C (68 ±33.8°F)
Temperature for operation of the equipment	15-30°C (59-86°F)
Permissible relative humidity	40-80%
Max. sound emission of the machine (Db(A))	70
Thermal stabilization time (h)	3
Level of protection of electrical equipment (IP)	43

CUT E 350

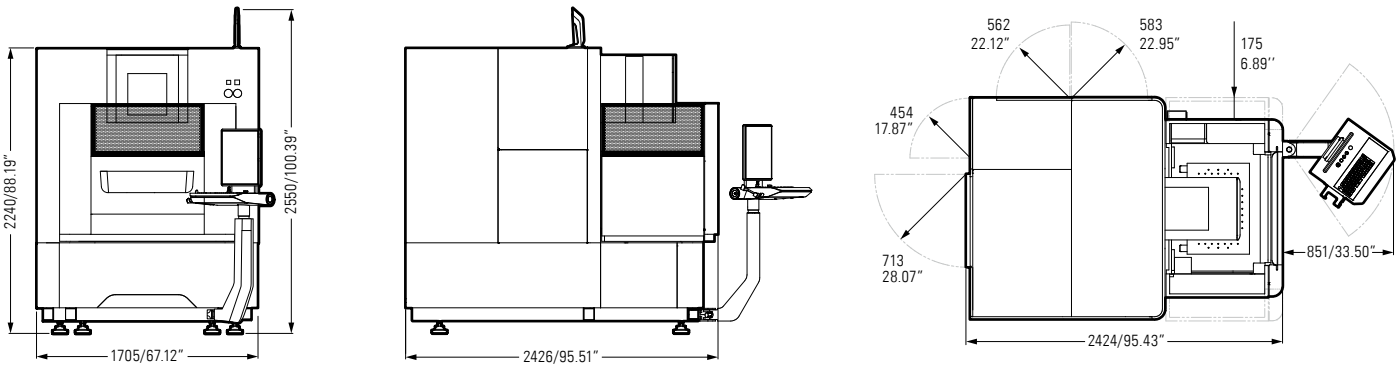

CUT E 600

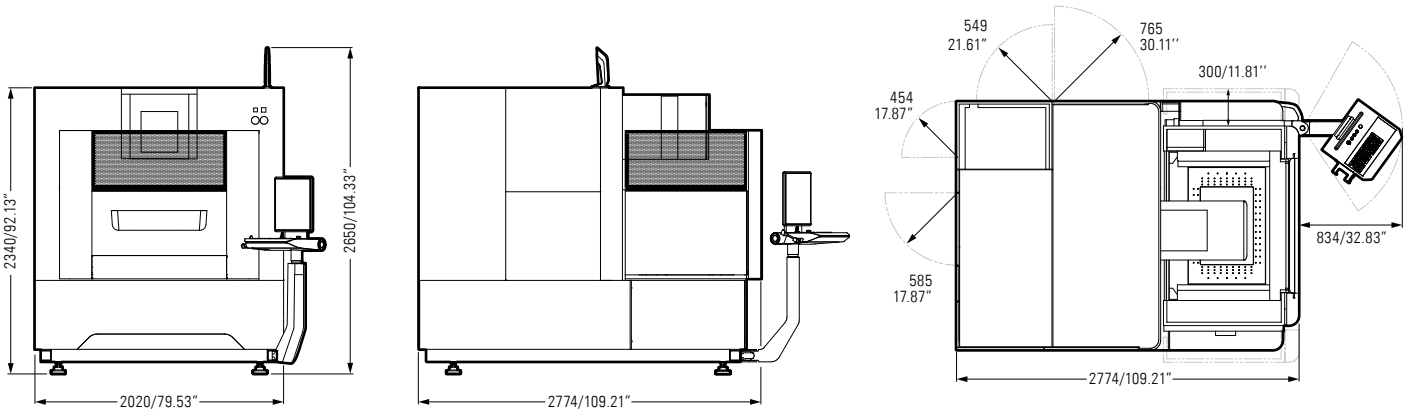

CUT E 350 (SWIVEL DOOR)

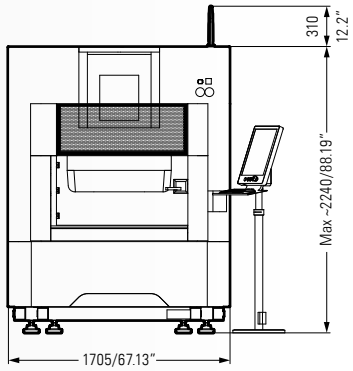

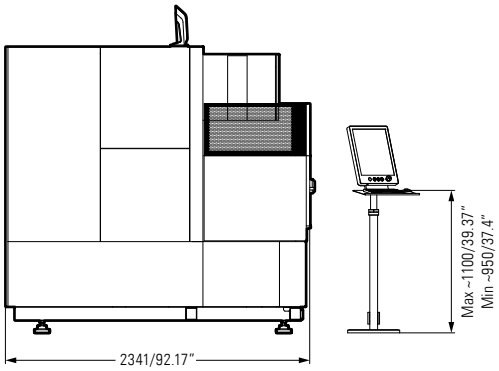

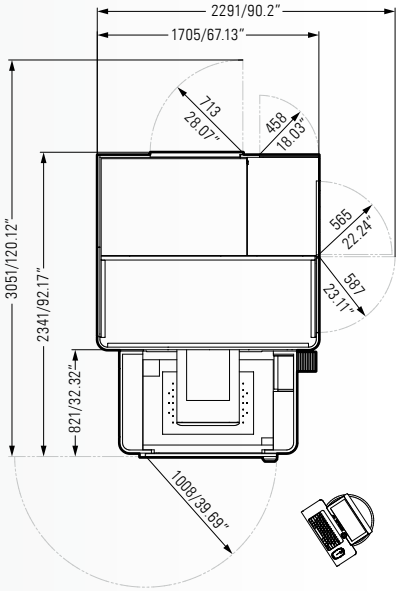

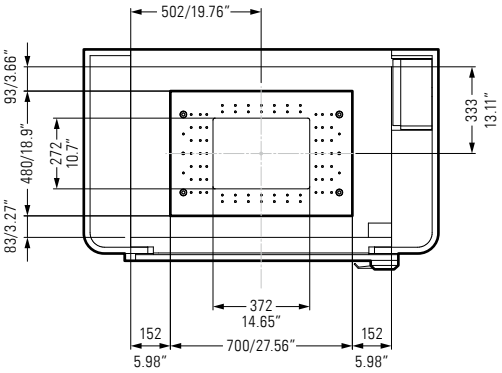

CUT E 600 (SWIVEL DOOR)

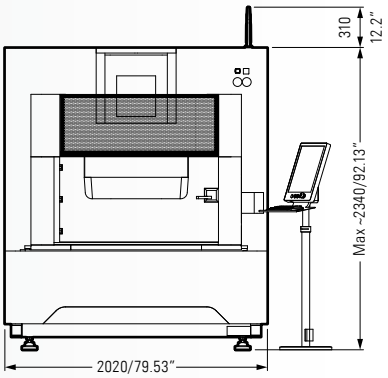

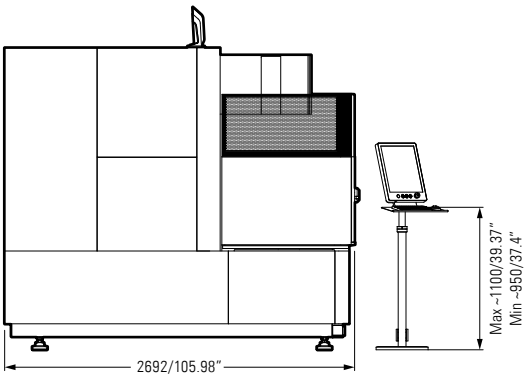

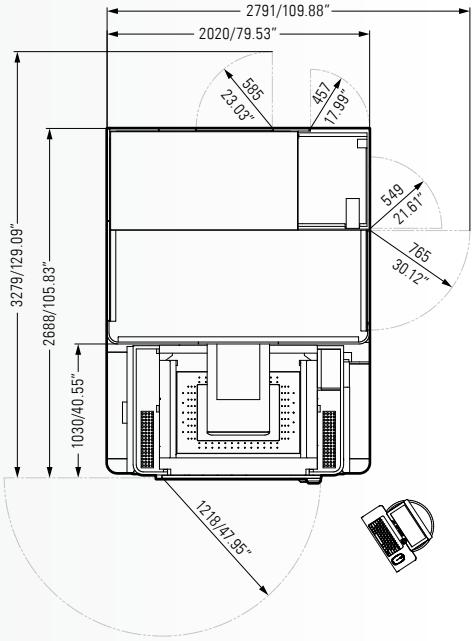

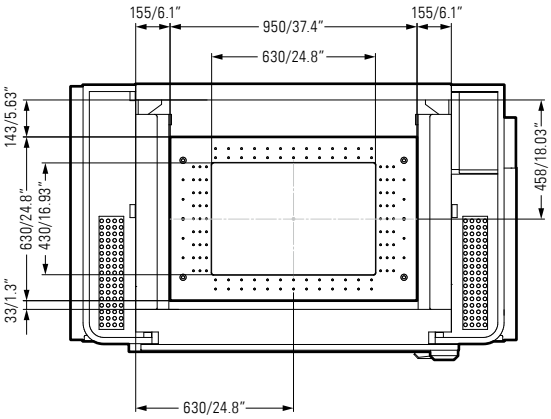

AGIE CHARMILLES

AGIE CHARMILLES, inventor of industrial EDM, is known as a premium brand and innovation leader in Wire, Die-Sinking, and Hole-Drilling EDM. Our automation-ready solutions serve mold making and high-end part production—delivering Swiss precision, reliability, and performance.

Year of foundation 1954
Head office Losone, Switzerland

AGIE CHARMILLES's product portfolio includes wire-cutting, die-sinking, hole-drilling EDM solutions as well as fully customized solutions for specific applications like aerospace.

By integrating the latest technological advancements (Intelligent Power Generator, Intelligent Spark Protection System, iWire, and FORM eCAM), AGIE CHARMILLES machines deliver high-precision cutting performances, extreme accuracy, and nano-level surface finish. Our EDM solutions are renowned for their speed, precision, and energy efficiency, catering to diverse machining needs beyond Mold & Die applications.

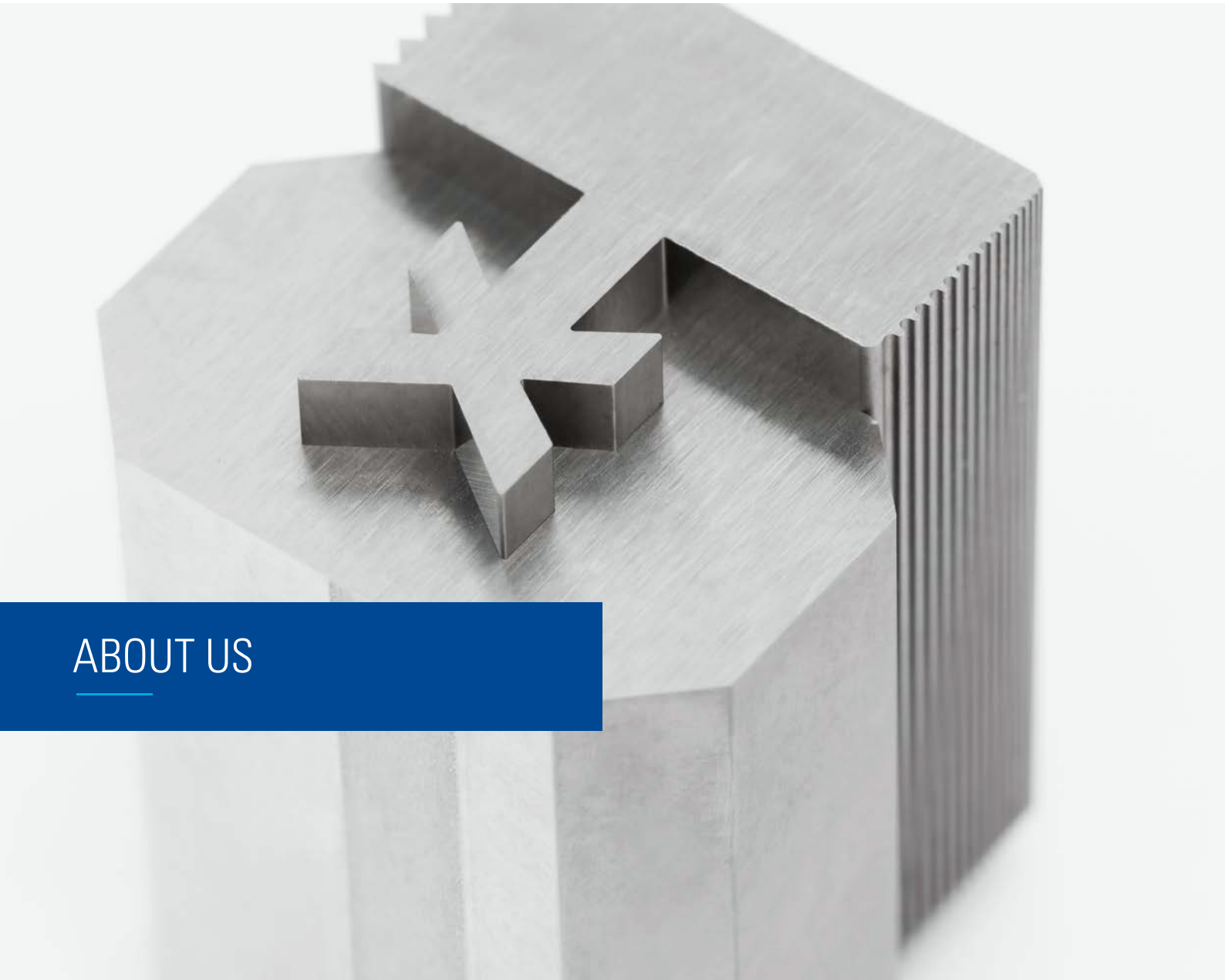

ABOUT US

UNITED MACHINING SOLUTIONS

UNITED MACHINING SOLUTIONS is one of the largest machine tool manufacturers in the world. With around 5,000 employees at over 50 global production, service and sales locations, UNITED MACHINING SOLUTIONS is close to its customers and highly efficient. The group is organized into two divisions: UNITED GRINDING and UNITED MACHINING.

UNITED GRINDING includes the brands MÄGERLE, BLOHM, JUNG, STUDER, SCHAUDT, MIKROSA, WALTER, EWAG and IRPD. Its technologies include surface and profile grinding machines, cylindrical grinding machines, machines for tool machining and machine tools for additive manufacturing.

The UNITED MACHINING division includes the brands AGIE CHARMILLES, CHARMILLES, MIKRON MILL, LIECHTI, STEP TEC and SYSTEM 3R. It includes machines for EDM (Electrical Discharge Machining), high-speed milling and laser technology as well as spindle production and automation solutions.

«We want to make our customers even more successful»

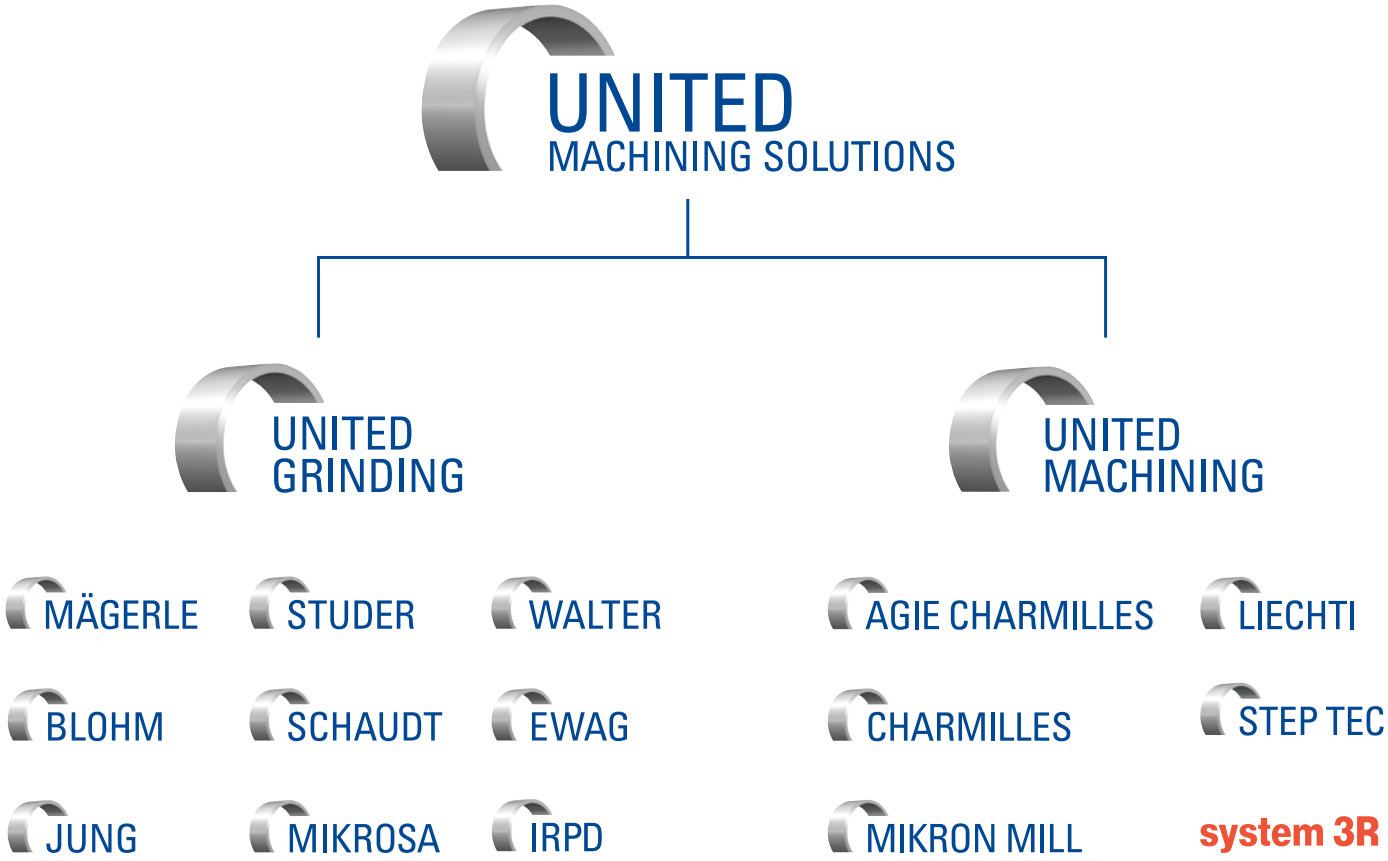

AGIE CHARMILLES

Agie Charmilles SA, Losone
Via Zandone 1 · 6616 Losone · Switzerland
Tel. +41 91 806 90 30
info@machining.com

Worldwide contact information can be found at
machining.com

BLUecoMPETENCE
Alliance Member
Partner of the Engineering Industry Sustainability Initiative